| PART NO. | STOCK CODE | VARIANTS |
|---|---|---|
| BE-210C | A1239 | BLACK & WHITE (PAL) |
| BE-810C | A1242A | COLOUR (PAL) |
| BE-811C | A2914 | COLOUR (NTSC) |

| RevNo | Revision note | Date | Signature | Checked |
|---|---|---|---|---|

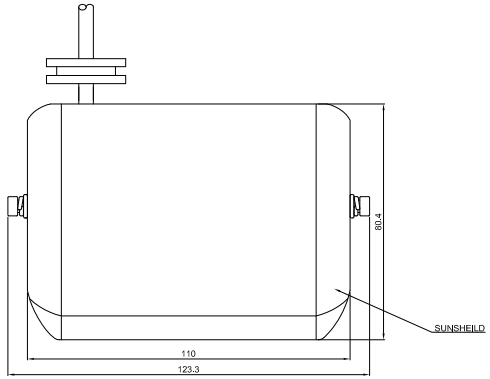


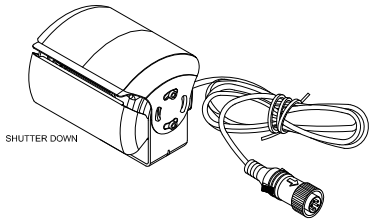


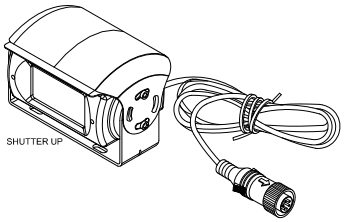


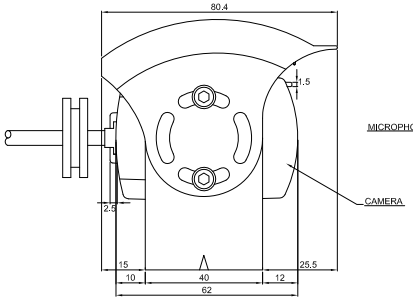


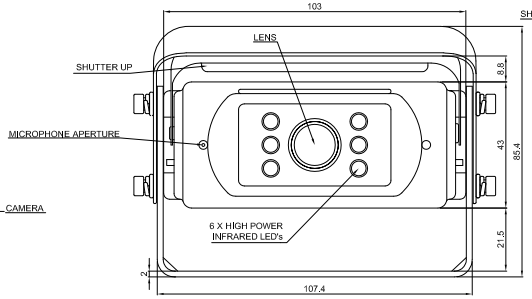


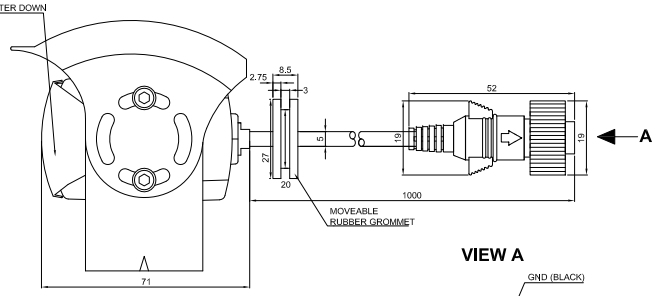


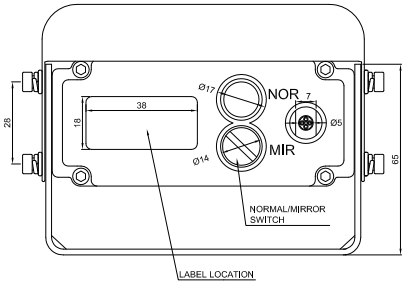


**VIEW A**

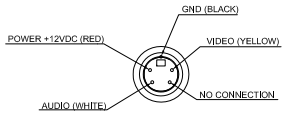


4-PIN DIN MALE
MATING FACE

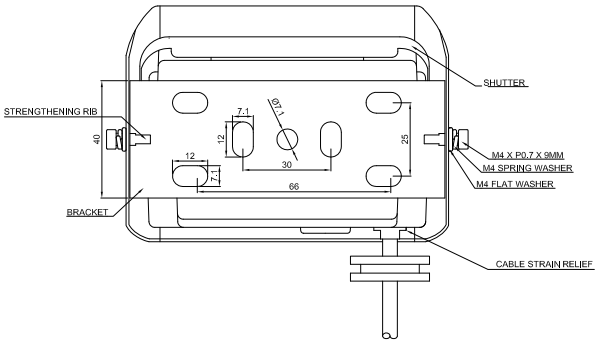


NOTES:
DIMENSIONS IN MM
*REFER TO "PRODUCT SPECIFICATION" FOR MORE DETAILS*


PROPRIETARY NOTICE
THIS DESIGN AND TECHNICAL INFORMATION APPEARING ON THIS DRAWING IS THE PROPERTY OF BRIGADE ELECTRONICS PLC, AND IS DISCLOSED IN CONFIDENCE. IT IS NOT TO BE COPIED, REPRODUCED, REVEALED TO OR APPROPIATE BY OTHERS, EITHER IN WHOLE OR IN PART WITHOUT THE EXPRESS WRITTEN CONSENT OF BRIGADE ELECTRONICS PLC.


| Itemref | Quantity | Title/Name, designation, material, dimension etc | | | Article No./Reference | |
|---|---|---|---|---|---|---|
| Designed by M.BUTLER | | Checked by D.KERAI | Approved by - date S.MATTHEWS | Filename GM | Date 13/02/09 | Scale n/a |

BRIGADE ELECTRONICS

BE-810C (A1242A)

BE-000701-00-09 | Edition A | Sheet n/a